Linde Material Handling



Pallet Stackers

D10 HP SP | AP

Capacity 2.0 t | Series 1161

PB ION

Agile double transporter

- → Simultaneous pick-up of two pallets for speedy loading and unloading, efficient goods transport and order picking
- → Solid steel skirt around the standing platform (SP) to protect the operator in the event of collision (SP version)
- → Unique platform concept with standing position at 45° angle and Linde e-driver control for better all-round vision and an ergonomic body posture (SP version)
- → Foldable vehicle platform for flexible use in pedestrian and driving mode (AP version)
- → High-performance version (HP) with greater travel and lifting speed for maximum handling performance

TECHNICAL DATA (according to VDI 2198)

Characteristics	1.1	Manufacturer (abbreviation)		Linde MH	Linde MH
	1.2	**Manufacturer's type designation**		**D10 HP SP**	**D10 HP AP**
	1.2a	Series		1161-00	1161-00
	1.3	Drive		Battery	Battery
	1.4	Operation		Stand on	Pedestrian/Stand on
	1.5	Rated capacity/rated load	Q (t)	1.0 / 1.0/1.0 / 2.0[1]	1.0 / 1.0/1.0 / 2.0[1]
	1.6	Load centre distance	c (mm)	600	600
	1.8	Load distance, centre of drive axle to fork	x (mm)	865/935[2] [3]	865/935[2] [3]
	1.9	Wheelbase	y (mm)	1336/1406[2] [3] [4]	1336/1406[2] [3] [4]
Weight	2.1	Service weight	kg	1069[5] [6]	1069[5] [6]
	2.2	Axle loading, laden front/rear	kg	1309/1751[5] [6]	1290/1746[5] [6]
	2.3	Axle loading, unladen front/rear	kg	803/257[5] [6]	785/251[5] [6]
Tyres/chassis	3.1	Tyres: solid rubber, superelastic, pneumatic, polyurethane		Polyurethane	Polyurethane
	3.2	Tyre size, front		Ø 230 × 90	Ø 230 × 90
	3.3	Tyre size, rear		2x Ø 85 × 60 (Ø 85 x 85)[7]	2x Ø 85 × 60 (Ø 85 x 85)[7]
	3.4	Auxiliary wheels (dimensions)		2x Ø 125 × 60	2x Ø 125 × 60
	3.5	Wheels, number front/rear (x = driven wheels)		1x + 2/4 (1x + 2/2)[7]	1x + 2/4 (1x + 2/2)[7]
	3.6	Tread, front	b10 (mm)	572[2]	572[2]
	3.7	Tread, rear	b11 (mm)	355/380[2]	355/380[2]
Dimensions	4.2	Mast height, lowered	h1 (mm)	1710[2]	1710[2]
	4.3	Free lift	h2 (mm)	150[2]	150[2]
	4.4	Lift	h3 (mm)	2514[2]	2514[2]
	4.5	Mast height, extended	h4 (mm)	2967 (3300/3600)[2] [8]	2967 (3300/3600)[2] [8]
	4.6	Initial lift	h5 (mm)	115[9]	115[9]
	4.7	Height of overhead guard (cabin)	h6 (mm)	2224[2]	-
	4.9	Height drawbar in driving position min./max.	h14 (mm)	1207/1287[2]	1149/1357[2]
	4.10	Height of wheel arms	h8 (mm)	80[10]	80[10]
	4.15	Height, lowered	h13 (mm)	86[10]	86[10]
	4.19	Overall length	l1 (mm)	2300[2] [4]	2273[2] [4]
	4.20	Length to fork face	l2 (mm)	1150[2] [4]	1123[2] [4]
	4.21	Overall width	b1/b2 (mm)	790[2]	790[2]
	4.22	Fork dimensions DIN ISO 2331	s/e/l (mm)	71/180/1150[11]	71/180/1150[11]
	4.24	Fork carriage width	b3 (mm)	780[2]	780[2]
	4.25	Fork spread	b5 (mm)	535/560[2]	560/680[2]
	4.26	Distance between wheel arms/loading surfaces	b4 (mm)	196/316[2]	196/316[2]
	4.31	Ground clearance, laden, below mast	m1 (mm)	135/20[3]	135/20[3]
	4.32	Ground clearance, centre of wheelbase	m2 (mm)	135/20[3]	135/20[3]
	4.34.1	Aisle width for pallets 1000 × 1200 crossways	Ast (mm)	2831/2890[3] [12] [13]	2804/2863[3] [12] [13]
	4.34.2	Aisle width for pallets 800 × 1200 lengthways	Ast (mm)	2738/2766[3] [12] [13]	2711/2739[3] [12] [13]
	4.35	Turning radius	Wa (mm)	2016/2086[3] [13]	1989/2059[3] [13]
Performance data	5.1	Travel speed, laden/unladen	km/h	10/10[14]	10/10[14]
	5.2	Lifting speed, laden/unladen	m/s	0.257/0.425 (0.04/0.07)[6] [15]	0.257/0.425 (0.04/0.07)[6] [15]
	5.3	Lowering speed, laden/unladen	m/s	0.395/0.301 (0.08/0.08)[6] [15]	0.395/0.301 (0.08/0.08)[6] [15]
	5.8	Max. gradeability, laden/unladen	%	8.0/15.0	8.0/18.0
	5.9	Acceleration time, laden/unladen	s	5.9/5.0	5.9/5.0
	5.10	Service brake		Hydr./Electro-mech.	Hydr./Electro-mech.
Electric-engine	6.1	Drive motor rating S2 60 min	kW	2.3 (3)[7]	2.3 (3)[7]
	6.2	Lift motor rating at S3 15%	kW	2.6	2.6
	6.3	Battery according to DIN 43531/35/36 A, B, C, no		43 535 B/2PzS	43 535 B/3PzS
	6.4	Battery voltage/nominal capacity K5	(V)/(Ah) o. kWh	24/250	24/375
	6.5	Battery weight (±5%)	kWh	212	333
	6.6	Power consumption according to VDI cycle	kg	-	-
	6.6	Energy consumption according to DIN EN 16796	kWh/h	0.85	0.85
	6.6.1	CO_2 equivalent according to DIN EN 16796	kg/h	0.46	0.46
	6.7	Turnover output according to VDI 2198	t/h	55	55
	6.8	Turnover efficiency according to VDI 2198	t/kWh	33	33
Drive	8.1	Type of drive unit		AC controller	AC controller
Additional data	10.7	Sound pressure level LpAZ (at the operator's seat)	dB(A)	68	68

1) LP only / LP/LI / LI only
2) (±5 mm)
3) Load arms upraised/lowered
4) +65 mm = 2 PzS vertical change; +135 mm = 3 PzS; +235 mm = 4 PzS
5) Figures with battery, see line 6.4/6.5
6) (±10%)
7) Figures in ( ) optional
8) (With 700/1000 mm load support)
9) (0/-5 mm)
10) (-0/+5 mm)
11) Reach legs 75 × 150 × 1115
12) Including a 200 mm (min.) operating aisle clearance
13) -75 mm = 2 PzS vertical change; ±0 mm = 3 PzS vertical change; +150 mm = 4 PzS vertical change; +175 mm = 4 PzS side change
14) (±5%)
15) Figures in parenthesis with initial lift

D10 HP SP

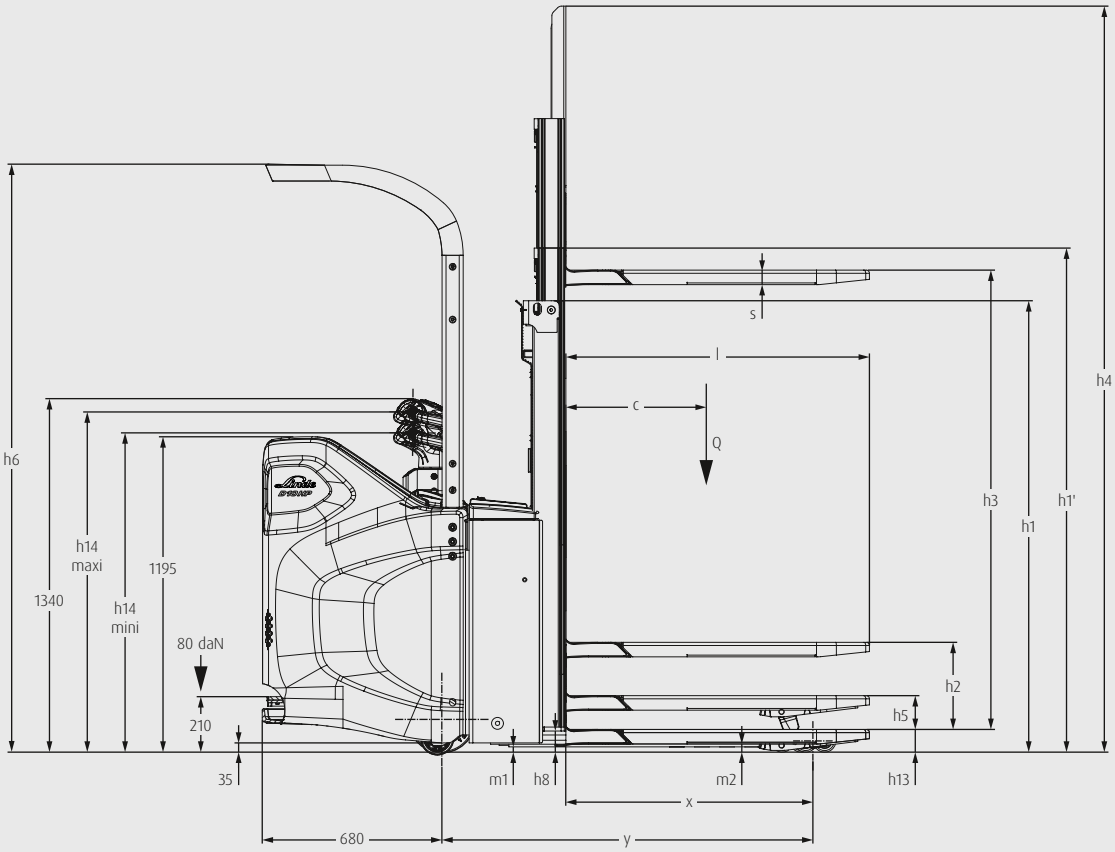
h6
1340
h14
maxi
h14
mini
1195
80 daN
210
35
680
y
x
m1
h8
m2
h13
h5
h2
h3
h1
h1'
h4
s
l
c
Q

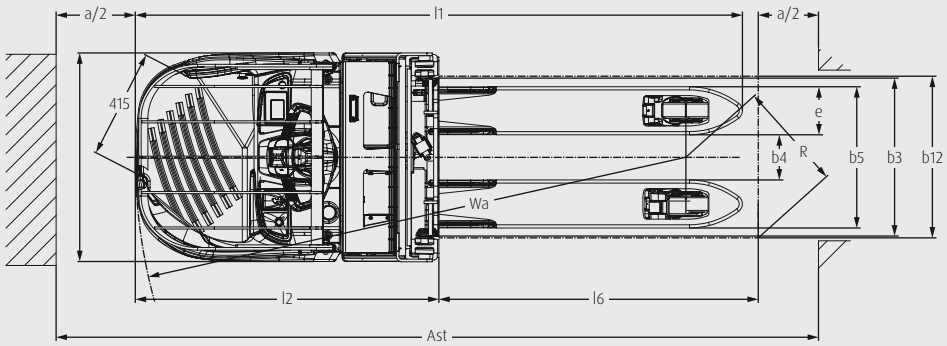
a/2
l1
a/2
415
e
b4
R
b5
b3
b12
Wa
l2
l6
Ast

MAST TABLES

SIMPLEX MAST (in mm)

Lift	h3: 1589
Height measurements	h1: 2042 h2: 1589 h4: 2042
Manufacturer's type designation	
D10 HP SP	○
D10 HP AP	○

STANDARD MAST (in mm)

Lift	h3: 1589	h3: 2089	h3: 2514
Height measurements	h1: 1247 h2: 150 h4: 2042	h1: 1497 h2: 150 h4: 2542	h1: 1710 h2: 150 h4: 2967
Manufacturer's type designation			
D10 HP SP	○	○	○
D10 HP AP	○	○	○

DUPLEX MAST (in mm)

Lift	h3: 1589	h3: 2089	h3: 2514
Height measurements	h1: 1247 h2: 794.5 h4: 2042	h1: 1497 h2: 1044.5 h4: 2542	h1: 1710 h2: 1257 h4: 2967
Manufacturer's type designation			
D10 HP SP	○	○	○
D10 HP AP	○	○	○

○ Optional equipment

h1: Height of mast, lowered
h2: Free lift
h3: Lift
h4: Height of mast, extended

STANDARD AND OPTIONAL EQUIPMENT

	Manufacturer's type designation/equipment	D10 HP SP	D10 HP AP
Safety	Automatic speed reduction when cornering	●	●
	Key switch	●	●
	Log-in PIN code	○	○
	Folding sideguards and platform	–	●
	Unique, safe and intuitive 45° operating position	●	–
	Linde BlueSpot – visual warning of truck presence integrated in the chassis contours	○	–
	Linde BlueSpot – visual warning of truck presence mounted on accessory support	–	○
	Foot-detection sensor – truck slows down or stops if operator's foot is detected outside of the platform contours	○	–
	Lorry detection – automatic speed reduction and illumination inside the lorry	○	○
Service	CAN bus technology	●	●
Digitalisation	Data transmission online	○	○
	Data transmission WiFi	○	○
	myLinde – local fleet management with different functional modules	○	○
	Linde Pre-Op Check App – personalised daily check protocol for operational readiness	○	○
Operation/load handling	Speed Management – intelligent management of speed in double deck mode in relation to load on forks	○	○
	Soft landing on forks	○	○
	Lift end stop sensor	○	○
	Low speed if initial lift lowered	○	○
	Maximum operating speed limitation (8, 10, 12, 14 km/h, depending on the model)	○	○
	Load backrest h=700 mm or 1000 mm	○	○
	Overhead guard	○	–
	Dedicated work station (with storage compartments)	●	●
Environ-ment	Coldstore -35°C (in/out) – with metal grid or standard floor mat	○	○
Workplace	Fully suspended operator compartment – both feet platform and steering unit are suspended	●	●
	Adjustment of the fully suspended operator compartment – 3 position (soft, medium, hard)	○	–
	Padded leg rest and backrest	●	–
	Twin-grip handlebar	●	●
	Innovative Linde e-driver control perfectly suited for the 45° operation	○	–
	Height-adjustable steering unit	○	–
	Multifunction coloured display hour meter, maintenance indication, battery discharge indicator and internal fault code indication	○	○
	Accessory support	○	○
	Support for data terminal and power supply cable 24V	○	○
	Scanner support and clipboard	○	○
	Electrical socket USB 5V	○	–
Mast	Simplex mast	○	○
	Standard mast	○	○
	Duplex mast	○	○
	Mast protection: mesh	○	○
Attachment/ forks	Width over fork carriage 560 mm with fork length 1150 mm	○	○
	Width over fork carriage 680 mm with fork length 1150 mm	○	○
Axles and tyres	Drive wheel heavy duty, polyurethane non-marking	●	●
	Drive wheel high grip, polyurethane non-marking	○	○
	Single load wheel, polyurethane	●	●
	Tandem load wheel, polyurethane (also available in greasable version)	○	○
	Castor wheels with spring cylinder	●	●
	Hydraulic castor wheels, electronically controlled	○	○
Drive and brake system	Power steering	●	●
	Maintenance-free AC motor	●	●
	Electromagnetic braking system (or electromechanic)	●	●
	Li-ION and lead-acid technology available with different battery capacities depending on the model	○	○
	Integrated charger for lead-acid and Li-ION batteries	○	○
	External chargers available	○	○
Lighting	Working lamp – with on/off switch for operation in dark environments	○	○

● Standard equipment ○ Optional equipment – Not available

CHARACTERISTICS



Lorry-detection system assists safe entry into trailers

Safety

→ Automatic adjustment of operating speed when cornering to prevent risky manoeuvres
→ Wide mast design for optimal visibility of the load and the immediate vehicle environment
→ Operator always remains within the contours of the vehicle for optimum protection in any situation
→ Solid steel skirt as a protective shield to protect the operator from injury in the event of a collision (SP version)
→ Optional foot detection can also slow down or bring the vehicle to a smooth stop when operator's feet leave the platform (SP version)



Unique concept with 45° driving position

Ergonomics

→ Linde OptiLift assistance system for precise control of mast functions at high working speeds and quiet, energy-saving load handling
→ Fully decoupled operator platform to protect the operator from vibrations and shocks
→ Innovative steering concept Linde e-driver for optimum, single-handed control of the vehicle in the 45° position if required (SP version)
→ Electric power steering for effortless vehicle control in any work situation
→ Automatic and gradual adjustment of the travel speed to the steering angle for precise manoeuvring in tight spaces



Perfect combination between power and manoeuvrability

Handling

→ High residual capacities for maximum vehicle stability when working at height
→ Powerful 2.3 kW and 3 kW three-phase motor for rapid acceleration even with double load
→ High top speeds (14 km/h without load, 11 km/h with load, 9 km/h with double load) for fast transport travel
→ Five-point configuration with optional electrically controlled and hydraulically operated castor wheels for perfect vehicle stability
→ Optional shortened truck version with Li-ION battery allows for smaller turning radius, especially in tight spaces



Easy access to components and data

Service

→ Robust 2.3 kW and 3 kW three-phase motor for long service intervals and low maintenance costs
→ Solid construction with durable parts and sturdy chassis for maximum vehicle availability
→ Design-to-service principle for effortless accessibility to all relevant components
→ Innovative CAN bus structure for fast error analysis via diagnostic connector
→ Modern E/E architecture allows remote installation of updates and new functions

Presented by:

Subject to modification in the interest of progress. Illustrations and technical details could include options and are not binding for actual constructions. All dimensions subject to usual tolerances.

Linde Material Handling

Linde Material Handling GmbH
Carl-von-Linde-Platz | 63743 Aschaffenburg | Germany
Phone + 49 6021 99 0 | Fax + 49 6021 99 1570
www.linde-mh.com | info@linde-mh.com

DS_D10_HP_SP_AP_1161_en_A_1026